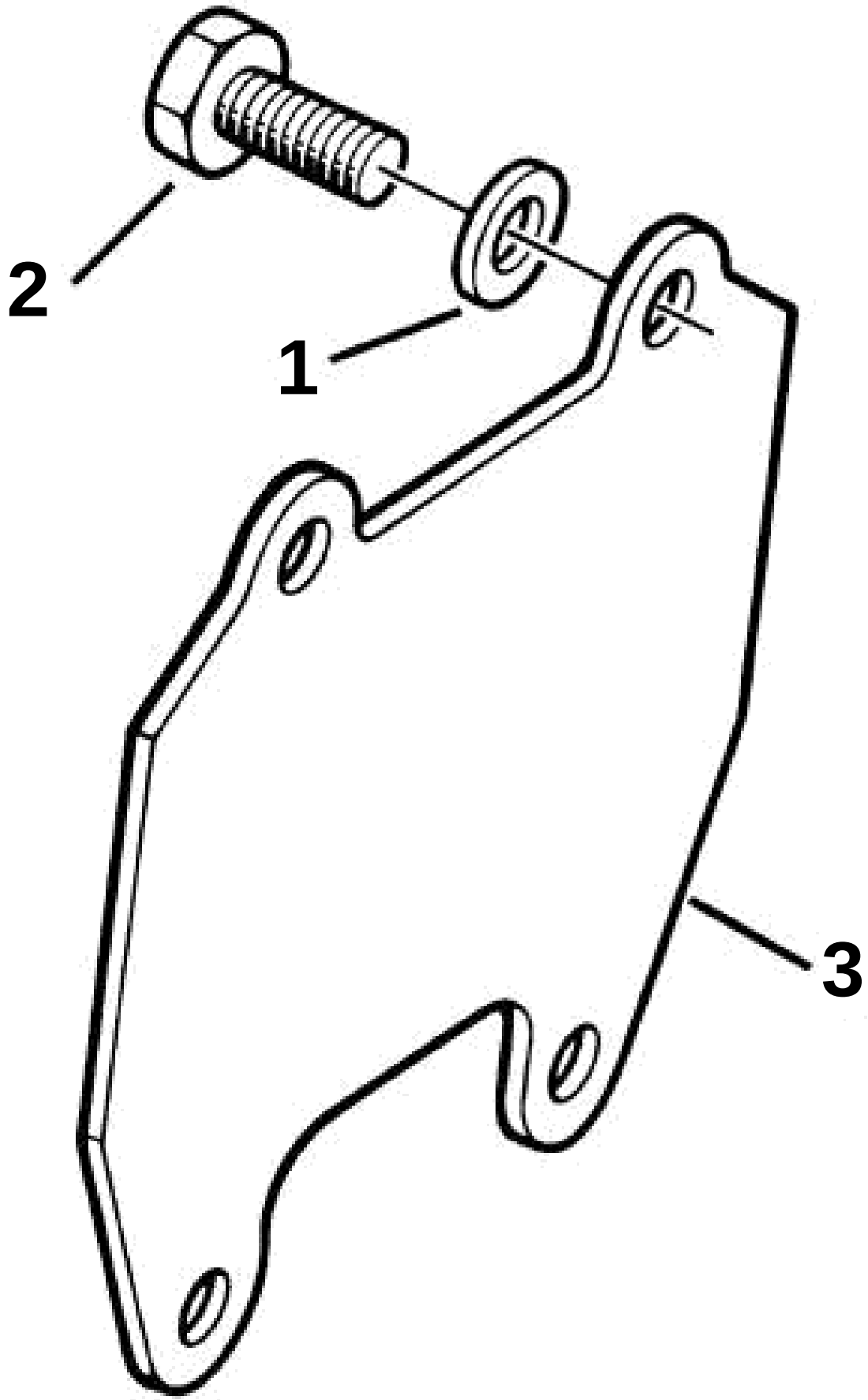
2
1
3

EXHAUST PLATE KIT

REF	PART NO.	QTY	DESCRIPTION	NOTES
	3850889	1	Kit	SX, DP-S
1	3852002	4	· Lock washer	
2	3855227	4	· Screw	
3	3855228	1	· Cover plate	